POWER® breathe MEDIC

makes breathing easier℠

CE
Class 1
Medical Device

USER MANUAL

Introduction

POWERbreathe will make your breathing muscles stronger, reducing breathlessness during exercise or activity.

POWERbreathe uses a technique known as resistance training. This strengthens the breathing muscles by making them work harder, in much the same way as you might use weights to increase the strength of your arm muscles.

When training with POWERbreathe, you will notice that you have to work harder to breathe in. This is the effect of resistance training acting on the muscles used to inhale – primarily the diaphragm and rib cage muscles. When breathing out, there is no resistance and you can breathe out normally, allowing the chest and breathing muscles to relax, naturally pushing the air from your lungs.

Used properly, you should begin to enjoy the benefits of using your POWERbreathe in just a few weeks.

To make sure you get the most from your POWERbreathe, please read this instruction booklet carefully and take time to get used to your POWERbreathe.

PIP Code: 232-1040
NHS Drug tariff listing
Part IXA - Appliances
Generic Description:
'Inspiratory Pressure threshold loading device'

Contents

Precautions 4

Product description 5

Getting used to your POWERbreathe 6

Training with POWERbreathe

Guidance for patients 8

Training diary 10

Guidance for Healthcare Professionals 13

Care and maintenance 15

Technical specifications 16

Disclaimer 20

Precautions

POWERbreathe is suitable for almost anyone and will cause no harmful side effects when used properly. Please read the following precautions to ensure that you use the POWERbreathe safely and appropriately:

- CONTRAINDICATIONS: Inspiratory muscle training, such as training with POWERbreathe, is not recommended for patients with a history of spontaneous pneumoth orax (a collapsed lung that was not due to traumatic injury e.g. broken rib), as it may lead to a recurrence of the condition. Following a traumatic pneumothorax and/or broken rib, POWERbreathe should not be used prior to full recovery. If you have any doubts about POWERbreathe's suitability, or you have a medical condition, please consult your doctor.
- POWERbreathe is not suitable for asthma patients who have low sympton perception and suffer from frequent, severe exacerbations.
- Do not make changes to any prescribed medication or prescribed treatment programme without consulting your doctor.
- This product is not intended to diagnose, treat, cure or prevent any disease.
- POWERbreathe is designed for exercising your inspiratory muscles only. No other use is intended or implied.
- Anyone who is under the age of 16 should only use POWERbreathe with supervision from an adult. POWERbreathe contains small parts and is not suitable for children under 3 years.
- Whilst training with POWERbreathe you should feel resistance to inhaling but it should not be painful. If you should feel pain whilst using POWERbreathe, stop immediately and consult your doctor.
- Some users may experience slight ear discomfort when training with POWERbreathe, especially if they are recovering from a cold. This is caused by inadequate equalisation of pressure between the mouth and ears. If symptoms persist, please consult your doctor.
- If you are suffering from a cold, sinusitis or respiratory tract infection, we advise that you do not use your POWERbreathe until symptoms have disappeared. If in doubt, consult your doctor.
- Do not use POWERbreathe if you are suffering from a ruptured eardrum.
- To prevent the potential transmission of infections, we recommend that you do not share your POWERbreathe with other users, including family members.

POWERbreathe is clinically proven to improve symptoms, exercise tolerance and quality of life in major debilitating conditions such as COPD and asthma. If you, or your doctor, would like more information on the clinical effectiveness of POWERbreathe, please consult our website (www.powerbreathe.com). If you have any more questions about POWERbreathe, please call the distributor in your country.

Contents:

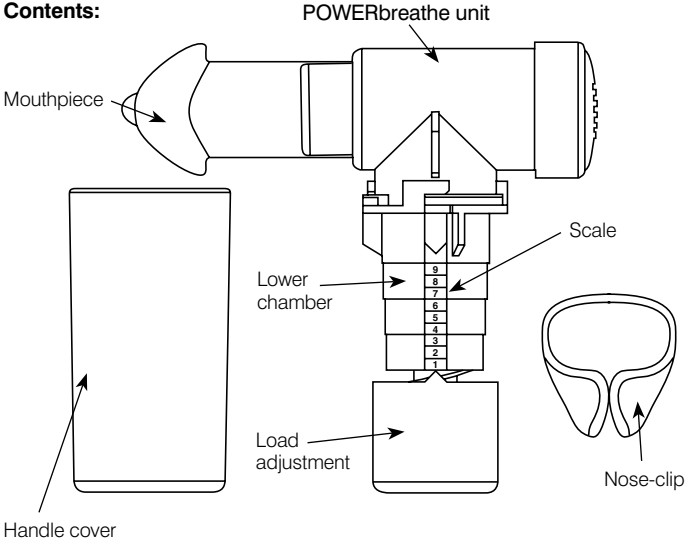

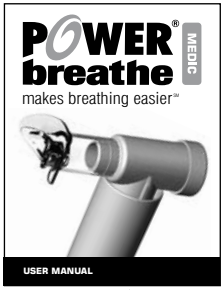

User manual

Ziplock storage pouch

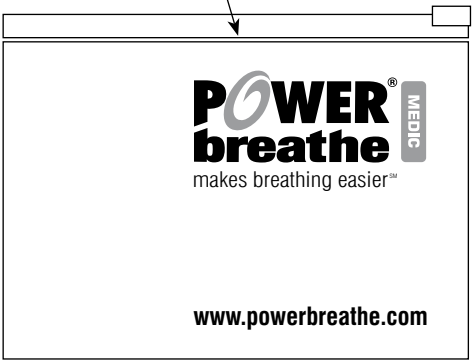

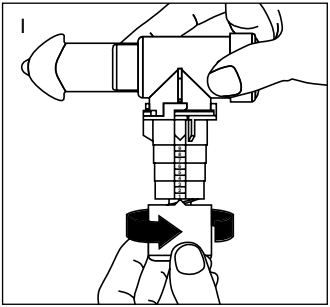

Diagram 1: Adjusting the POWERbreathe
Remove the POWERbreathe, handle cover and nose-clip from the packaging. Holding the POWERbreathe upright, practice adjusting the training level: rotate the load adjustment knob clockwise to increase the training level; rotate the load adjustment knob anticlockwise to reduce the training level. Notice that a numbered scale is visible on the side of the POWERbreathe, giving you guidance when selecting a training level.
Note: do not over tighten the adjustment knob beyond level 9 as this may cause damage to the mechanism.

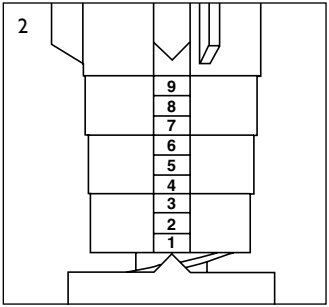

Diagram 2: Level 1
Now set the POWERbreathe to level 1.
At this level, the tip of the arrow on the load adjustment knob should be aligned with the lower edge of the scale, as shown in the diagram.

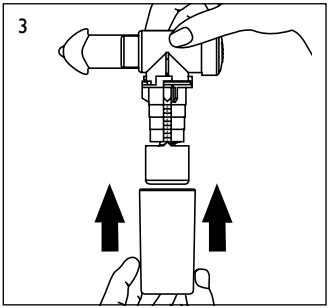

Diagram 3: Replacing the handle cover
Push the handle cover onto the POWERbreathe, covering the scale and load adjustment knob.
Note: always ensure the handle cover is in position before breathing through the POWERbreathe, as this allows the mechanism to function correctly.

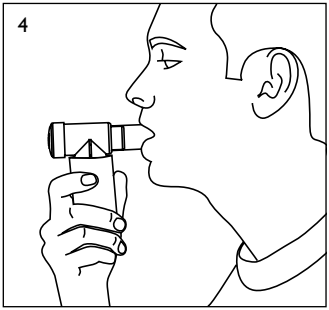

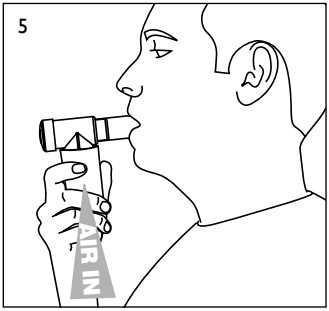

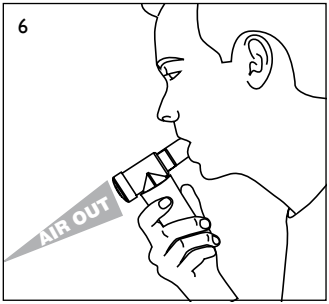

Diagram 4: Placing the POWERbreathe in your mouth
Make sure you are sitting or standing upright and feel relaxed. Holding the POWERbreathe by the handle cover, place the mouthpiece in your mouth so that your lips cover the outer shield to make a seal.

Diagram 5: Inhaling through the POWERbreathe
Breath out as far you can then take a fast, forceful breath in through the mouth. Take in as much air as you can, as quickly as you can, straightening your back and expanding your chest.

Diagram 6: Exhaling through the POWERbreathe
Now breathe out slowly and passively through your mouth until your lungs are empty, letting the muscles in your chest and shoulders relax. Pause until you feel the urge to breathe again. Repeat this exercise until you feel confident about breathing through the POWERbreathe.
Note: do not pant – if you start to feel light-headed, slow down and pause at the end of your breath out..

Using the nose-clip
Now put the nose-clip on so that it pushes your nostrils together. Continue to practice taking a forceful breath in then breathing out slowly and fully.
Note: the nose-clip will help you to breathe through your mouth rather than your nose. However, it is not essential and some people find it more comfortable to train without the nose-clip.

Guidance for patients

Please follow the instructions below, unless instructed to do otherwise by your doctor. Before commencing the exercises, please ensure that you have read the precautions section on page 5 of this manual.

Finding your correct training level: **The recommended POWER breathe training routine is 15 minutes of continuous breathing through the POWERbreathe, twice a day.** In order to get the most from the training, these exercises should be completed at a level that is as hard as possible, without causing discomfort.

For the first day of training, set your POWERbreathe to level 1 (see Diagram 1 - "Getting used to POWERbreathe"). Some individuals may find the exercises very challenging at this level. If you find you are unable to complete 15 minutes of continuous breathing in one attempt at this level, take a short rest then start again until you have accumulated a total of 15 minutes of exercise.

If you found it difficult to complete 15 minutes of continuous breathing at level 1, continue to train at this level twice a day for the first week.

If you found you could easily complete 15 minutes of continuous breathing at level 1, the next day you should set your POWERbreathe to level 2. Complete the exercises again. By this method, continue to increase the training level by 1 setting each day, until you are only just able to complete 15 minutes of continuous training. Once you have reached this point, continue to train at this level twice a day for one week.

After one week of training with POWERbreathe at the same level, increase the training level by half a turn. Continue to train at this level for a further week. From this point onwards you should aim to increase the POWERbreathe level by half a turn each week.

Table 1 (Page 10) is an example of a typical training diary record for a patient starting to use POWERbreathe. Table 2 is blank, and is provided so that you may keep a record of you progress with POWERbreathe.

Achieving good training technique:
When you inhale through your POWERbreathe, you should breathe in as deeply and as quickly as possible. When you exhale, breathe out slowly and gently until your lungs are completely empty. Try to squeeze out as much air as possible towards the end of the breath to ensure your lungs are completely empty. Pause until you feel the urge to breath again before inhaling again (Approx 3-4 secs).

You will notice that it becomes harder to completely fill your lungs as you continue to breathe during a training session. This is because you breathing muscles are becoming tired. If you can no longer take a satisfying breath, take a short break before continuing your training. If you find you are unable to complete a breath early in your training session, the POWERbreathe load level may be set too high. In this case, simply decrease the training level by half a turn, then continue your training session.
Note: Training should feel challenging. At the end of 15 minutes training, you should aim to feel as if you cannot continue further.

If you feel out of breath, light-headed or you need to cough, take a short break. As soon as you have recovered, continue the training session until you have completed a total training time of 15 minutes.

If you miss a training session, simply complete the session as soon a possible. If you miss it by more than 12 hours, ignore the missed session and carry on with your next training session as normal.

Maintaining your breathing:
After 12 weeks your breathing muscles should have improved substantially and you should feel less breathless during activity. At this stage you will not need to use your POWERbreathe every day to maintain your improved breathing. Training with your POWERbreathe just 3 times a week will be sufficient to continue to enjoy a better lifestyle.

Table 1: Example training diary – in this example, level 5 was the maximum that could be sustained for 15 minutes during week 1 of training

Week 1	Day 1		Day 2		Day 3		Day 4		Day 5		Day 6		Day 7	
	Level	Duration	Level	Duration	Level	Duration	Level	Duration	Level	Duration	Level	Duration	Level	Duration
Morning	1	15	2	15	3	15	4	15	5	15	5	15	5	15
Evening	1	15	2	15	3	15	4	15	5	15	5	15	5	15

Table 2: Record the training level on your POWERbreathe and the duration (in minutes) of your training sessions below -

Week 1	Day 1		Day 2		Day 3		Day 4		Day 5		Day 6		Day 7	
	Level	Duration	Level	Duration	Level	Duration	Level	Duration	Level	Duration	Level	Duration	Level	Duration
Morning														
Evening														

Week 2	Day 1		Day 2		Day 3		Day 4		Day 5		Day 6		Day 7	
	Level	Duration	Level	Duration	Level	Duration	Level	Duration	Level	Duration	Level	Duration	Level	Duration
Morning														
Evening														

Week 3	Day 1		Day 2		Day 3		Day 4		Day 5		Day 6		Day 7	
	Level	Duration	Level	Duration	Level	Duration	Level	Duration	Level	Duration	Level	Duration	Level	Duration
Morning														
Evening														

Week 4	Day 1		Day 2		Day 3		Day 4		Day 5		Day 6		Day 7	
	Level	Duration	Level	Duration	Level	Duration	Level	Duration	Level	Duration	Level	Duration	Level	Duration
Morning														
Evening														

Week 5	Day 1		Day 2		Day 3		Day 4		Day 5		Day 6		Day 7	
	Level	Duration	Level	Duration	Level	Duration	Level	Duration	Level	Duration	Level	Duration	Level	Duration
Morning														
Evening														

Week 6	Day 1		Day 2		Day 3		Day 4		Day 5		Day 6		Day 7	
	Level	Duration	Level	Duration	Level	Duration	Level	Duration	Level	Duration	Level	Duration	Level	Duration
Morning														
Evening														

Week 7	Day 1		Day 2		Day 3		Day 4		Day 5		Day 6		Day 7	
	Level	Duration	Level	Duration	Level	Duration	Level	Duration	Level	Duration	Level	Duration	Level	Duration
Morning														
Evening														

Week 8	Day 1		Day 2		Day 3		Day 4		Day 5		Day 6		Day 7	
	Level	Duration	Level	Duration	Level	Duration	Level	Duration	Level	Duration	Level	Duration	Level	Duration
Morning														
Evening														

Week 9	Day 1		Day 2		Day 3		Day 4		Day 5		Day 6		Day 7	
	Level	Duration	Level	Duration	Level	Duration	Level	Duration	Level	Duration	Level	Duration	Level	Duration
Morning														
Evening														

Week 10	Day 1		Day 2		Day 3		Day 4		Day 5		Day 6		Day 7	
	Level	Duration	Level	Duration	Level	Duration	Level	Duration	Level	Duration	Level	Duration	Level	Duration
Morning														
Evening														

Week 11	Day 1		Day 2		Day 3		Day 4		Day 5		Day 6		Day 7	
	Level	Duration	Level	Duration	Level	Duration	Level	Duration	Level	Duration	Level	Duration	Level	Duration
Morning														
Evening														

Week 12	Day 1		Day 2		Day 3		Day 4		Day 5		Day 6		Day 7	
	Level	Duration	Level	Duration	Level	Duration	Level	Duration	Level	Duration	Level	Duration	Level	Duration
Morning														
Evening														

Visit our website to download more tables

Guidance for healthcare professionals

Contraindications: Please read the precautions section on page 5 of this manual in order to assess a patient's suitability for inspiratory muscle training.

Patients should be instructed in the proper use of POWERbreathe before commencing training. Please familiarise yourself with the operation of the device prior to assisting a patient in its correct use referring to the sections on "Getting Used to POWERbreathe" and "Training with POWERbreathe - Guidance for Patients". Guidance on training with POWERbreathe is based upon that published in the European Respiratory Society's 'Breathe' journal (McConnell et al, Inspiratory muscle training in obstructive lung disease; how to implement and what to expect. September. vol 2(1),pp39-49, 2005). Visit our website to download the full article.

Note: Some patients may be unable or unwilling to use a mouthpiece. In this instance, the POWERbreathe mouthpiece may be replaced with a facemask in order to provide a seal to the mouth.

Setting the training load:

Research indicates that inspiratory muscle training (IMT) loads must exceed 30% of the patients' maximal inspiratory muscle strength in order to be effective. There is also evidence that heavier loads yield greater improvements in inspiratory muscle strength.

If you have access to a means of measuring inspiratory muscle strength, you may set the initial training load to 30-40% of MIP using the conversion table on pg10. The training load should then be increased by half a turn each day for the next 7-10 days up to 60% of baseline MIP. The patient should train at this level for 1 week. Thereafter, the training load should be increased weekly to maintain the training load at approximately 60% of the patient's new inspiratory muscle strength.

Note: at 60% MIP training will be strenuous and it may take some time before the patient is able to complete 15 minutes of continuous training without taking a break.

Coaching good training technique:
The first few days are the most challenging for the patient who will require careful and sensitive coaching, including the allowance of short breaks. They should be encouraged to tolerate the breathless sensation induced by training, and to increase the training load progressively. Typically, increases in load of 5-10% per week can be achieved.

It is advisable to encourage patients to train across the full extent of their vital capacity in order to train the full range of motion of the inspiratory muscles. As the patient's inspiratory muscles fatigue, they may find it hard to achieve higher lung volumes towards the end of inspiration.
At these higher lung volumes the inspiratory muscles are weakest and will be most prone to the effects of fatigue. Patients should be warned to expect this and should be discouraged from training beyond the point where they are able to achieve a 'satisfying breath'.

Patients should also be encouraged to inhale against the load as rapidly as possible in order to maximally recruit their inspiratory muscles.

Patients should breathe with a combination of diaphragmatic and chest wall movement in order to utilise all of their inspiratory muscles during training.

Patients may require breaks during a training session in order to cough, or because they feel too breathless. It is important that the duration of these is minimised in order to maintain the training stimulus, but this too must be handled sensitively, and supported by an explanation of why it is important to minimise the duration of these enforced 'rest' periods.

Maintenance training:
After 12 weeks of training, the patient's inspiratory muscles should have improved substantially and they should feel less breathless during exercise. At this stage it is not necessary to train with POWERbreathe every day in order to maintain improved breathing. Training with POWERbreathe three times a week will be sufficient to maintain the training effects.

Precautions

POWERbreathe is designed to be as robust and durable as possible. With a little care, your POWERbreathe should last many years. Please read the following precautions to ensure that your POWERbreathe remains in top condition:

- Do not over-tighten the load adjuster knob: the maximum level is when the arrow on the adjuster covers the number 9 on the scale.
- Do not over-loosen the adjuster knob: when loosening the adjuster, try not to go lower than level 1 (described earlier) as this will unscrew the adjuster from the threaded section. If this happens, simply screw the adjuster back onto the threaded section, ensuring that the spring is in the correct position.
- Do not remove the end cap. This may allow the one-way flap valve to come loose.
- Please store your POWERbreathe in the ziplock pouch provided or a suitable clean and hygienic container. Always make sure that your POWERbreathe is dry before storage.

Cleaning

Your POWERbreathe will be exposed to saliva during use and we recommend that you clean it frequently to keep it hygienic and in good working order.

A few times a week, soak your POWERbreathe in warm water for about ten minutes and then wipe it with a soft cloth under warm, running water, paying particular attention to the mouthpiece. Shake off excess water and leave on a clean towel to dry.

Once a week perform the same procedure but soak your POWERbreathe in a mild cleansing or approved sterilising solution instead of water. The cleansing solution used must be intended for use on equipment that comes into contact with the mouth, such as that used for babies' bottles. POWERbreathe cleansing tablets are available from www.powerbreathe.com.

To keep your POWERbreathe in top condition, after sterilisation hold it upside down under a running tap so that water can run through the device. Shake off excess water and leave on a clean towel to dry.

Part	Material
Mouthpiece	PVC
Flap valve	Silicone rubber
O-ring	Nitrile rubber
Spring	Stainless steel
Tensioner:	Reinforced nylon 66
Ziplock storage pouch:	PVC
Handle cover, Main body, Lower chamber, End cap, Load adjuster and Nose-clip	Polypropylene

Materials are FDA compliant with regards to composition, additives, and properties, where applicable in accordance with Medical Device Directive 93/42/EEC Essential Requirements (Annex I).

Load Selection Range

(Values are approximate and may vary between units)

Model	Load (cmH_2O)								
	Level 1	Level 2	Level 3	Level 4	Level 5	Level 6	Level 7	Level 8	Level 9
Medic	10	20	30	40	50	60	70	80	90

POWERbreathe Classic series

- First edition series
- Available in variable resistances: light, medium and heavy
- Used by people the world over

POWERbreathe Classic Light model - Green
POWERbreathe Classic Medium model - Blue
POWERbreathe Classic Heavy model - Red

POWERbreathe Plus Series

- Optimised air flow performance
- Ergonomic design for increased exercise comfort and ease of use
- Optimised mouthpiece design, offering increased comfort to a broader range of users
- Anti-bacterial mouthpiece for improved hygiene
- Ergonomic, soft touch nose-clip for improved comfort, grip and style (suitable for swimming)
- Easy to read resistance level indicator
- Scratch resistant materials and simple disassembly for cleaning
- Available in variable resistances: light, medium and heavy

POWERbreathe PLUS Light model - Green
POWERbreathe PLUS Medium model - Blue
POWERbreathe PLUS Heavy model - Red

Also Available: POWERbreathe Plus Ironman® and Iron Girl®

Available in variable resistances: light, medium and heavy

See website for details

Official Inspiratory Muscle Trainers of IRONMAN. Iron Girl.

Ironman®, Ironman Triathlon®, Iron Girl® and M-Dot® are registered trademarks of World Triathlon Corporation. Used here by permission.

POWERbreathe Kinetic

AVAILABLE WINTER 09

The POWERbreathe Kinetic is an exclusive, adaptable and personalised respiratory coaching system offering many unique training features:

- Auto-optimising IMT technology that adapts specifically to users breathing function
- Advanced variable load training for improved training performance
- Performance monitoring capability for strength, power*, work* and training volume*
- Training intensity selector for personalised training protocols
- Performance monitoring software provided for downloading results to your PC*
- Built in breathing and guidance parameters to train, warm-up*, cool-down* and relax*
- Integrated pacing metronome, breath counter, end of session indicator
- Easy maintenance and user friendly design
- Rechargeable from mains or PC

*Availability of features dependant on model

Retain this information for your records

Limited 2 year Manufacturer's Warranty

This warranty gives the purchaser specific legal rights. The purchaser may also have other statutory rights. HaB International Ltd hereby warrants to the original purchaser whose name shall be duly registered with it that the product sold by it is free from defects in the material and workmanship.

The obligations of HaB International Ltd under this warranty are limited to the repair and replacement of such part or parts of the unit as shall be found upon inspection to be defective in material or workmanship. Misuse, abuse or accidents, negligence of the precautions, improper maintenance or commercial use, cracked or broken cases is not covered under this warranty. During the two year warranty period, the product will be either repaired or replaced (at our option without charge). Warranty does not cover damage or consequential damage caused by service not authorised by HaB International Ltd.

The warranties contained herein are expressly in lieu of any other warranties including implied warranty of merchantability and / or fit for purpose.

If mailed in the UK, please send to the following FREEPOST address (no stamp required). If mailed outside the Uk, please affix stamp.

HaB International Ltd
Freepost CV 2407, Southam, Warwickshire CV47 0RD, England, UK

Doctors surgery which prescribed this POWERbreathe

Name

_____

Town

_____

Pharmacy/Drug Store where purchased

Name

_____

Town

_____

Date of Purchase
Day / Month / Year

_____ / _____ / _____

Please remember to keep your receipt if proof of purchase is requested for warranty servicing.

POWERbreathe (a division of HaB International Ltd)
Northfield Road, Southam, Warwickshire CV47 0RD, UK

For UK enquiries, please call us on:
Tel: +44 (0)1926 816100
Fax: +44 (0)1926 816101
Email: ukenquiries@powerbreathe.com

For International enquiries, please email us or visit our website for your local distributor:
Email: enquiries@powerbreathe.com
Web: www.powerbreathe.com

POWERbreathe is not a toy. This product is designed to be used for breathing exercises only. Any other use is not recommended. This product is not intended to diagnose, cure or prevent any disease.

POWERbreathe is a patented product. All rights reserved. Specifications may change without notice due to manufacturer's continuous programme of development. No claims are made or implied in the use, or results by the use of equipment herein. The POWERbreathe logo type is a registered trademark of HaB International Ltd. All POWERbreathe product names are trademarks or registered trademarks of HaB International Ltd. E & OE © 07/2009.
All details are correct at time of going to press.

Developed, designed & manufactured with pride in the United Kingdom

Class 1 Medical Device

Design Council Award Winner

JN2966 ©2009 E & OE

www.powerbreathe.com